UptimeEquip
Flexible Innovative Packaging Systems

SelectEquip
Flexible Innovative Packaging Systems

MONDINI TECHNICAL SERVICE ROUTINE

CUSTOMER:	BINDAREE BEEF	DATE:	3-5/06/2023
ADDRESS:	6 TAREE STREET. BURLEIGH HEADS	CONTACT:	JOEY
	LINE 2 MINCE LINE	MACHINE NO:	A/21/A-12629

Equipment type/s:	Trave 590VGXL-S	Machine Cycles: 24376	Push Cycles: 24407
Product description:	Mince Line		Run Time: 6600hours
Was the machine running before the service?	Yes ☒ No ☐		Comments: Machine looks good and clean

Description	Comment	OK	Description	Comment	OK
Belts , Cords and Rollers			**Under Machine Screw operated**		
Condition of infeed belt	Adjust tension	☒	Check lifter servo motor bolts secure	Tight	☒
Condition of spacer belt	Good	☒	Check pusher servo motor bolts	Tight	☒
Check phasers and guides	All is good	☒	Check Main lifter belt + tension/springs	All good	☒
Check condition of deviator/belt	Good	☒	Check pusher arm belt tension	Tight	☒
Condition of out feed cords	Good	☒	Check any air leaks inside machine	1 leak. fixed	☒
Check bearings	Free spinning	☒	Check pneumatic air valves	Good	☒
Check and lubricate drum rollers	Yes	☒	Check operation of vacuum modules	Functional	☒
Check nylon gears	All is good	☒	All Sensors Tight and operational	Yes	☒
Check phaser cylinders	Ok	☒	All lifting bed locking screws tight	Yes	☒
Check for air leaks	None	☒	Check Ball screw lubrication	Good	☒
Check all infeed sensors	All good	☒	Check lifting posts lubrication	Good	☒
Check all infeed sensor's reflectors	All good	☒	Check pusher arm tubes for damage	None	☒
			Check pusher arm sleeves / lubricate	Good	☒
Film Scrap winding			Check sensors plug on pusher column	Good	☒
Check position of spreader cones	Ok	☒	Check all plugs on all servo motors	Tight	☒
Check scrap rewind tension	Ok	☒	Check gas fittings for leaks	Good	☒
Check condition of airshafts	Ok	☒	Operate and check mobile plate	Yes	☒
Check condition of film path rollers	Cleaned	☒	Operate fully auto lube & verify visually	Yes Twice	☒
Check tracking of rollers	Good	☒	Check auto lube tank level (Nils)	Still good	☒
Check for Air Leaks	None	☒	Check main lifting unit worm screw	Good	☒
			Operate pusher arm check movement	Good	☒
Film – Film Advance / drive					☒
Check nylon gears	Looks good	☒	Check filter in vacuum Pump		☐
Rollers & Bearings	All is ok	☒	Check operation off Air / Gas system	Good	☒
Check nylon bushing on film break.	Is ok	☒	**Lifting Plate**		
Rubber Roller	Is still very good	☒	Change O'Rings	All ok	☒
			Check Tool lock and Tool lock sensor	Tight	☒
Film Breaking Paddles	Cleaned	☒	Check hoses of Gas & Vacuum	Good	☒
Cylinder operation and pressure	Good	☒	Check height of mobile plate	72mm	☒
			Check upper slides for Nylon	Good	☒
Film – Winding shaft			Check solenoids	Good	☒
Airshaft for leaks	No Leaks	☒	Check doors and door locks	All good	☒
Check condition of white belt	Good	☒			
			No Shuttle system for this line		
Film Path					
Operation of dancers	Very good	☒	**Deviator**		
Pendulum	Good	☒	Check Handle on flywheel	Working	☒
Sensors	Good	☒	Check Rotary flywheel	Working	☒

Photo cell for printed film if in use	N/A	☒	Check guides for movement	Works	☒
Electrical			Check the belt tension		☐
Inspect Electrical Cabinet for loose connections	All good	☒	Check sensor and reflector	Works	☒
Check discoloured (hot) connections	None	☒	Check condition of gears under belt	Good	☒
Check All switches	All good	☒			
Check operation of machine Interface	Ok	☒			
Check 6 pin heater Socket plug	Good	☒			
Back up Recipes to USB	Stick not working	☒			
Infeed Timing and Setup	Good	☒			
Check Phasers Alignment	Good	☒			
Tray Denester					
Check both magazine cylinders	Good	☒			
Check both magazine teflon blocks	Good	☒			
Check both magazine air couplings	Good	☒			
Check denester fingers	Cleaned and Lubricated	☒			
Check denseter safety door sensors	Functional	☒			
Check stopper blocks	Ok	☒			
Check cylinders on stopper blocks	Ok	☒			
Check adjustment wheels X and Y	Ok	☒			
Check feed belts tension	Ok	☒			
Check selector assembly	Ok	☒			
S Shape transport belt					
Check drum motor	Good	☒			
Check belt tension	Good	☒			
Check all sensors on line	Good	☒			
Check all guides	Good	☒			
Meat Conveyor		☒			
Check top belt condition + tension	Good	☒			
Check transfer belt condition + tension	Good	☒			
Check phaser sensor	Good	☒			
Check phasor cylinder	Good	☒			
Check drive motors	Good	☒			
Check cable connections on motors	Good	☒			
			Reset all Alarms) Yes		
			Test Run Machine (with Product if applicable) No		

2.5.2 Screw-operated sealing assembly

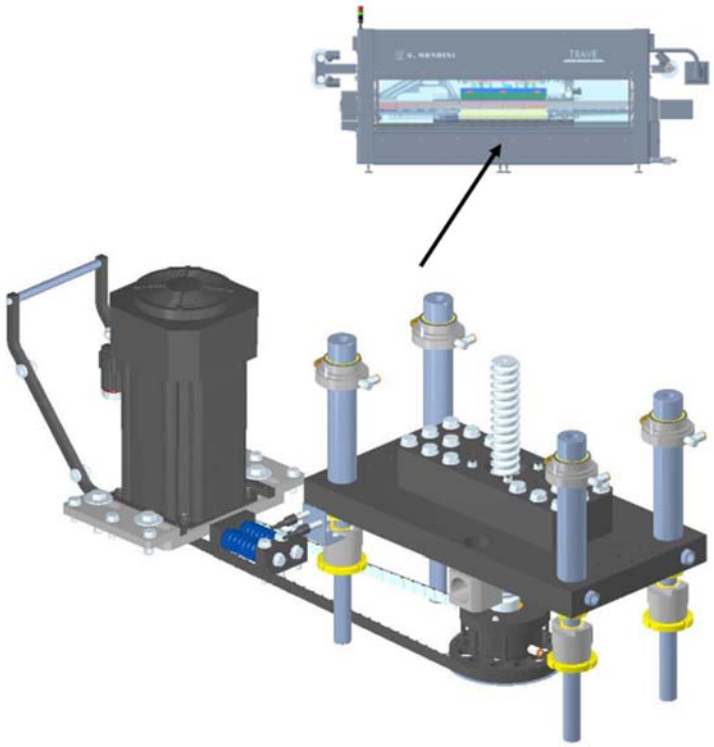

2.5.3 Pusher assembly

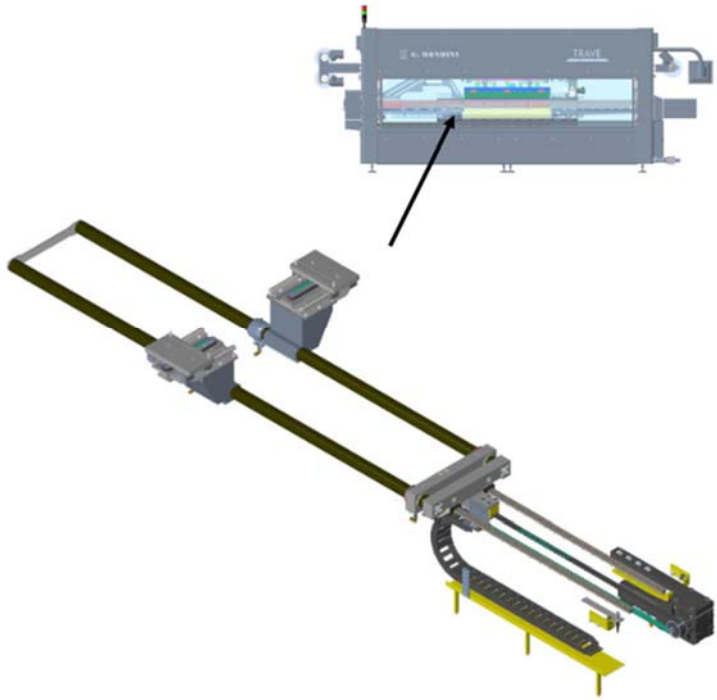

2.5.8 Film unwinder roller

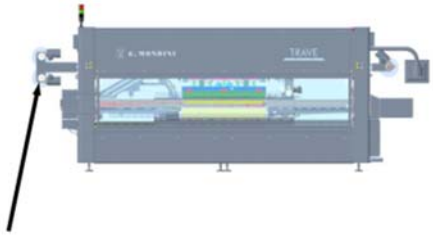

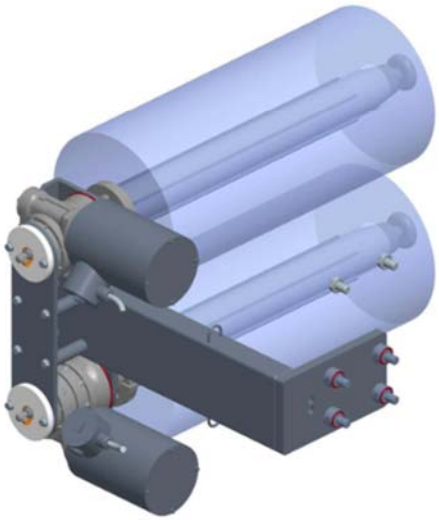

2.5.9 Film drive and pull roller and transmissions

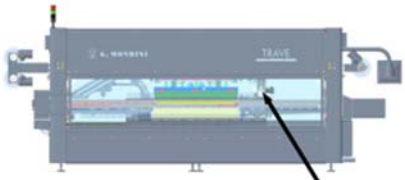

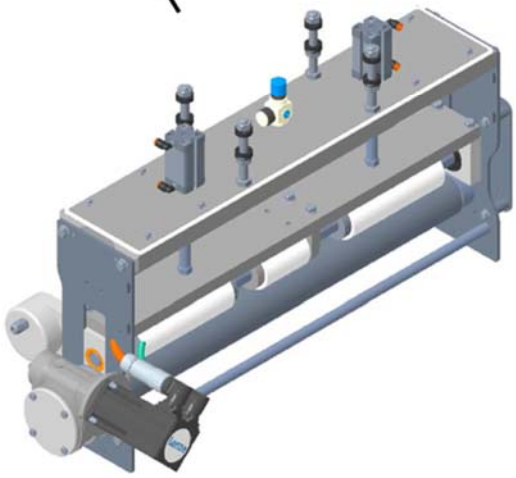

2.5.10 Winding shaft

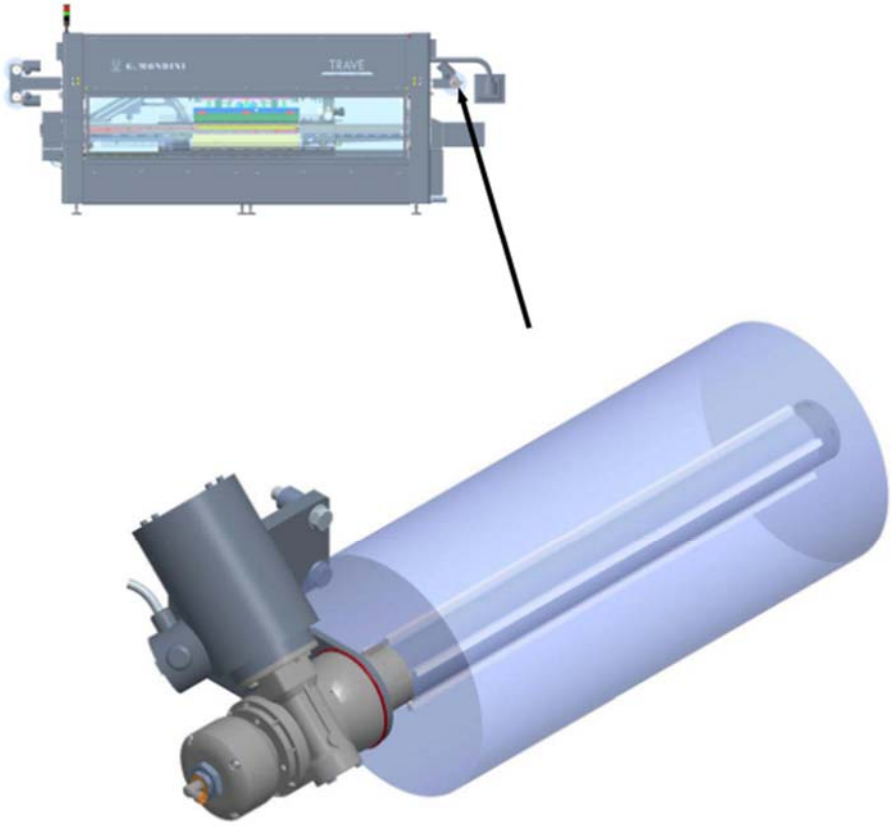

B.1 TRAYS DENESTER GENERAL DESCRIPTION

Further to acting as a container depot, this trays denester provides the additional featuring of depositing the containers on the lower machine feed belt for forward feeding towards the subsequent production phases.

The trays denester herein comprises a motorised feed belt, designed to carry forward the stacks of containers loaded up manually by an operator. A specific device transfers the containers into the trays denester's basket tray thereby guaranteeing prevention of machine stops due to missing containers. Container extraction from the basket trays is conducted via a set of rotating selector that enable to pick up the containers correctly and to deposit them onto the lower forward feed belt.

This section provides a description of the operations necessary for replacement of all the parts that may be subject to wear and tear.

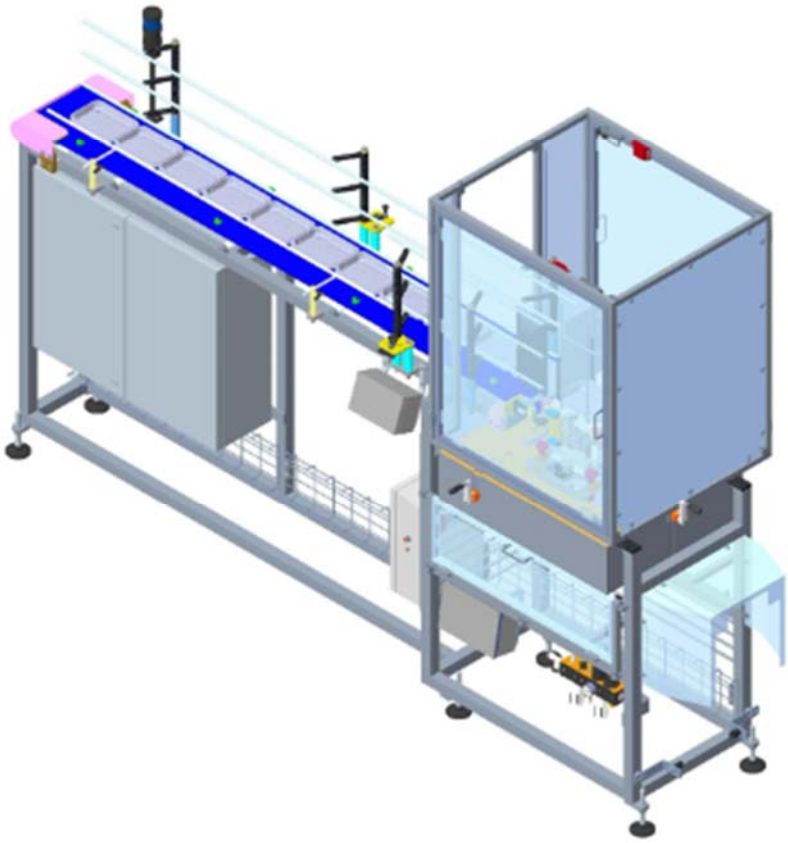

D.1 GENERAL DESCRIPTION

The meat conveyor consists of two belts, one above the other, used to feed product into the trays.

The upper belt moves the portion of meat. The distance between the portions can be modified by adjusting the speed of the motor.

The lower belt is driven by a drum motor and conveys the trays.

There are two photocells at the end of the upper belt. One of them detects the portions of meat and sends a signal to the cylinder of the lower belt to release the tray in exact alignment with the product. The other one measures the distance between the portions of meat. If they are too close, the photocell generates and alarm signal.

The lower belt has a cylinder that releases the tray exactly aligned with the portion of meat on the upper belt.

They trays are fed onto the lower belt by a device that positions the trays on a curved belt.

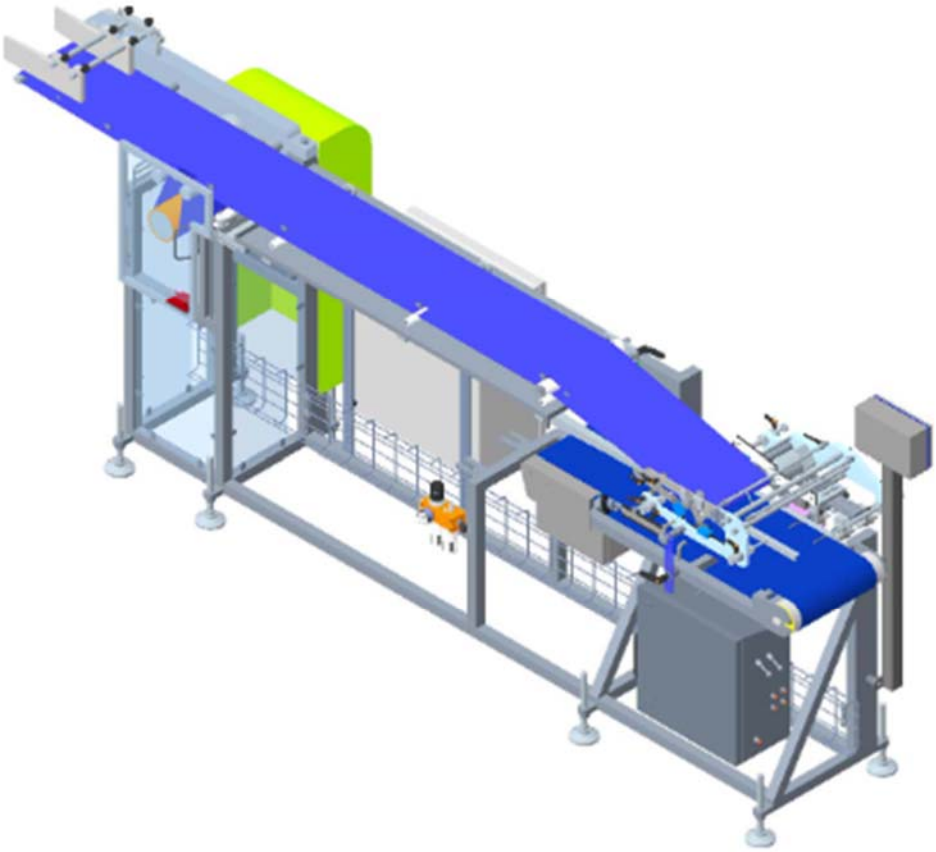

Diagram of a meat belt.

E.1 COMPOSITION

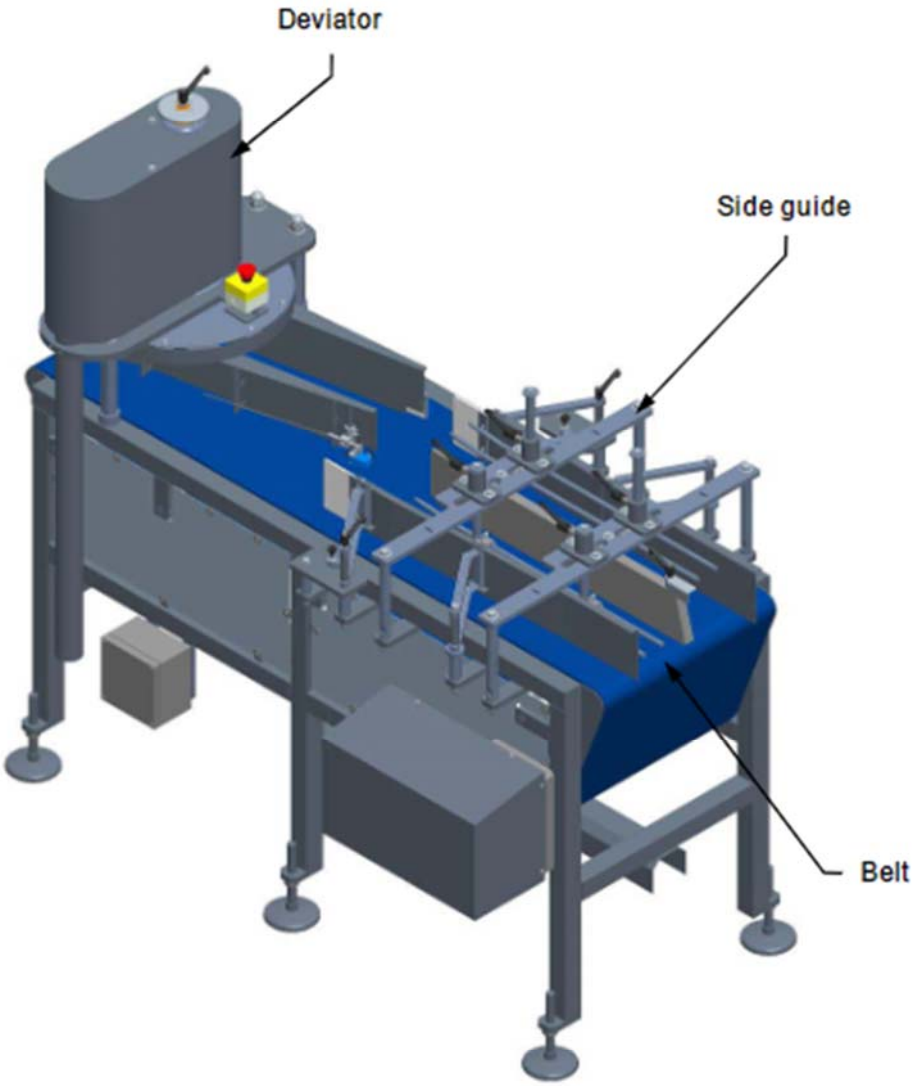

E-2 1-2 DEVIATOR BELT

UptimeEquip
Flexible Innovative Packaging Systems

SelectEquip
Flexible Innovative Packaging Systems

TOOL SERVICE ROUTINE

CUSTOMER:	BINDAREE FOOD GROUP	DATE:	3-5/06/2023
ADDRESS:	6 TAREE STREET. BURLEIGH HEADS	CONTACT:	JOEY
	LINE 2 MINCE LINE	MACHINE NO:	A/21/A-12629

Equipment type/s:	Trave 590VGXL-S							
Tool Number (STS)	A21A12629.61		A21A12629.60					
Tray Size	9x7 small		11x9 large					
	10 Cavity tool		8 Cavity Tool					
Description	**Comment**	**OK**	**Comment**	**OK**	**Comment**	**OK**	**Comment**	**OK**
Top Tooling								
Cleanliness	Clean	☒	Clean	☒		☐		☐
Knives	Good	☒	Good	☒		☐		☐
O'Cord	Good	☒	Good	☒		☐		☐
Straightness of film blocking Area	Good	☒	Good	☒		☐		☐
Lubrication	Lubricated	☒	Lubricated	☒		☐		☐
Inspect Bellows	Good	☒		☒		☐		☐
Electrical 6pin plug	Good	☒	Housing damage	☒		☐		☐
Check general condition	Good	☒	Good	☒		☐		☐
Check seal bars	Good	☒	Good	☒		☐		☐
Resistance check on elements	8.5 ohm	☒	8 ohm	☒		☐		☐
Check probe (PT100)	105 ohm	☒	150 ohm	☒		☐		☐
Bottom Tool								
Check Cleanliness	Clean	☒	Clean	☒		☐		☐
Check T Section (change if necessary)	All ok	☒	All ok	☒		☐		☐
Tighten Foot Plate	Tight	☒	Tight	☒		☐		☐
Lubricate	Yes	☒	Yes	☒		☐		☐
Replace O'Rings	All ok	☒	All ok	☒		☐		☐
Check Spring Length	No	☒	No	☒		☐		☐
Check O'Cords	All good	☒	All good	☒		☐		☐
Check Dampers	Good	☒	Good	☒		☐		☐
Check general condition	Good	☒	Good	☒		☐		☐
Bushings and shaft	Good	☒	Good	☒		☐		☐
						☒		☐

General Comments	Comments Tool 1	Comments Tool 2	Comments Tool 3	Comments Tool 4
	Good Condition	Good Condition		

Select Equip
7 Gatwick Road Bayswater North
Victoria 3153 Australia
Phone +61 (3) 8720 8400 AH 03 9761 7989

Trading as Select Equip
Select Packaging Systems Pty Ltd ABN 59 087 731 520
sales@selectequip.com.au www.selectequip.com.au

Service Technician: **Jacques Jordaan**_____ **Date:** **5 /06 /2023**
(Print Name) (Signature)

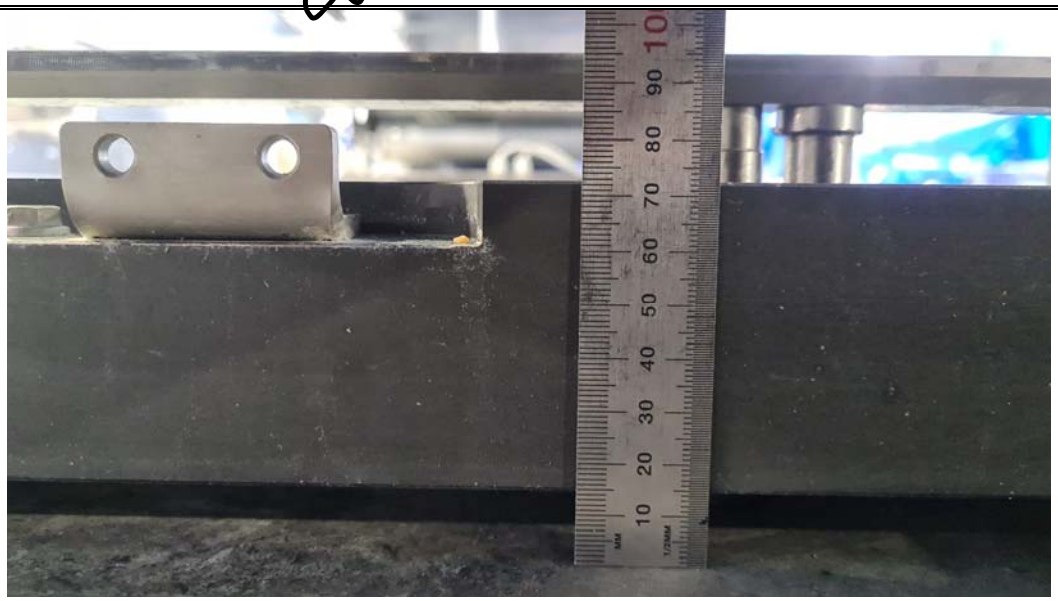

- Fixed orientation of bracket on dividing plate holder
- Removed spacer BELT AND CHECK BEARINGS OK.
- Phasers ok.
- Adjustment on phasors was tight. Adjusted spacing to get tighnes away.
- Polished of all debris on film path rollers.
- Polished of rust on film brake flaps.
- Lubricated all drum roll motors.
- Lubricated the spreader cone roller. Was a little tight
- Found one minor leak on gas hose on side of incoming . tightened hose clamp, all good.
- Can not make back up of recipe. Don't know why
- Opened all field e stops and panels. No signs of water or damp inside
- Denester lubrication unit empty. Filled up lubricator with oil

Testing tools.

- 8.5ohm x2 elements on small tool. 105 ohm for pt100 A21A12629.61 10 cavaty
- 8ohm x2 elements and 150 ohm for pt 100 large tool. A21A12629.60 8 cavaty.

Start up.

- Machine did not start up on Monday, But I have checked all bottom tool and top tools. Tested machine with empty trays ok.